Kinematic analysis of working bodies of soil surface treatment rotation units

associate professor, **Azamjon Kosimov***; doctoral student **Tuychiyeva Mavjuda***
Namangan State Technical University
*Correspondence: aaqosimov85@gmail.com (A.K.); toychiyevamavjuda13@gmail.com (T.M.)

Abstract: In article are considered new working body with active by working body which allows to carry out full preseeding processing of the soil and formation of ridges for one pass. Are executed kinematic calculation of active working body taking into account the movement of the tractor. It is chosen the most acceptable version of the scheme of processing of the soil.

Keywords: Soil, working body, seed, angular velocity, angle, pulley, pole radius, tension roller

Introduction

The development of the necessary equipment for high-quality plowing, especially toothed harrows, is still a problem. The main reason for this is the high cost of components imported from Russia and their production facilities. As a result, production disruptions occur. The cost of traditional harrows in Kolaversa is a burden for farmers.

In addition, the quality of the harrow currently used is not very good. Therefore, the development of harrowing equipment with high performance and low cost and the ability to produce it remains one of the challenges of today's development.

In the cultivation of agricultural crops, pre-sowing soil preparation is a labor-intensive and energy-intensive process. If the soil preparation is not done properly before planting, if the new soil is not soft and loose, the quality of the agricultural seeds cannot be sown at the level of agricultural technology requirements, and the seeds planted will not germinate properly[1, 2].

For farmers, it is a great idea to use aggregates that are prepared by applying aggregate to the soil in one pass and preparing it for planting. Because when using such aggregates, the soil is less compacted due to the fewer passes, and this allows the root system of crops to develop better and the crop to be more productive.

The proposed unit (Fig. 1) combines the technical processes applied to the soil before planting with the ability to break up the clods in one pass, achieving 90-100% crushing of the clods. The combined aggregate, which cleans the roots of weeds from the stumps, is mainly made from secondary metals and raw materials.

The principle of operation of the aggregate for loosening and loosening the soil before sowing is as follows. The basis of the aggregate is the active working body 5, the harrow is mounted on a stationary plate, fixed to the axle 8. The axle receives the movement of the harrow from the QOV through the reducer 4 and belt drives 7, crushing the soil and clods in a layer of 12 ÷ 14 cm, which is a solid foundation for the good development of the root system of the following crops. The plowshares 3 carry the clods to the required depth in the treated soil [3, 4].

If the movement of one working body of the aggregate is organized according to the organizational scheme in Fig.2, we assume that the remaining working bodies will also move in the same way.

The rotary working body undergoes complex motion during operation, and it moves in the direction of its motion (Fig.1).

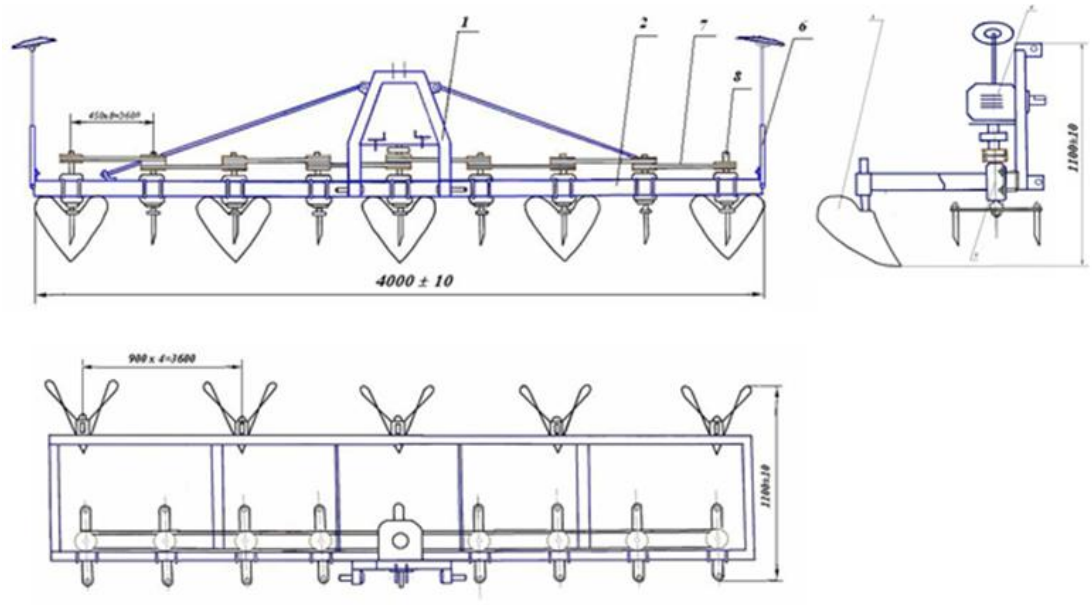

Fig. 1. A unit with a rotary working body that provides surface distance to the soil.

Methodology

Using the diagram presented in Figure 2, we construct the equation of motion of the blades of the working body in the XOZ coordinate system. It will look like this.

$$x = Vt + R_{\phi} \cos\alpha \qquad (1)$$

$$z = R_{\phi} \sin\alpha \qquad (2)$$

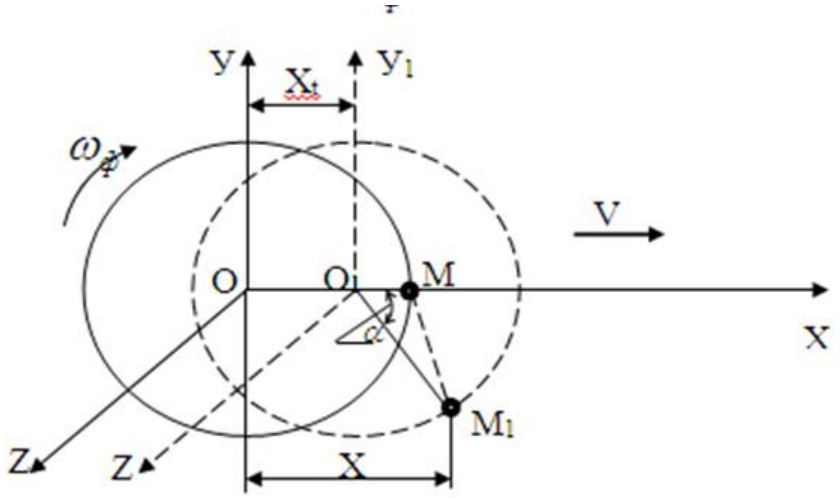

Fig. 2. ***Scheme for unifying the equation of motion of the teeth of the working body***

As can be seen from equations (1) and (2), during the working process, the teeth move in a cycloidal manner. By introducing the working body kinematic parameters (working modes) into equation (1) $\lambda = \frac{V_\phi}{V}$ (where, - $V_\phi = \omega_\phi R_\phi$ is the rotational speed of the teeth in the base case, m/s) and , $\alpha = \omega_\phi t$ we obtain the following result

$$x = \frac{\omega_\phi t}{\lambda} + R_\phi \cos \omega_\phi t \; ; \qquad (3)$$

$$z = R_\phi \sin \omega_\delta t \; . \qquad (4)$$

If $\lambda \quad 1$ the trajectory of the teeth of the working body is in a short (without a face) cycloid belt (Figure 3, a and b), $\lambda \; 1$ then in a hollow cycloid belt (Fig.3, c) [5, 6].

We determine the absolute development and acceleration of the teeth of the working body by taking the first and second derivatives with respect to time from equations (3) and (4).

$$V_a = \sqrt{(\frac{dx}{dt})^2 + (\frac{dz}{dt})^2} = \omega_\phi \sqrt{\frac{1}{\lambda^2} - \frac{2}{\lambda} R_\phi \sin(\omega_\phi t) + R_\phi^2} \qquad (5)$$

and

$$a_a = \sqrt{(\frac{d^2x}{dt^2})^2 + (\frac{d^2z}{dt^2})^2} = \omega_\phi^2 R_\phi \; . \qquad (6)$$

It is clear from equations (5) and (6) that, while the absolute value of the cut the drum blades in the working process is clearly dependent on their turning points ωt , while the perforation is unchanged and equal to the centripetal acceleration, in the new working process the milled drumming blades will have only centripetal acceleration [7, 8].

Results and Discussion

The variable load proportional band in the mechanism through the rationing body is as follows, according to the diagram in Figure 3.

$$\omega_\phi = \varpi_2 = \frac{\omega_1 \quad r_1}{r_2} \; \frac{a \;\; \cos\varphi_3^{/} + \sqrt{r_3^2 - a^2 \;\; \sin^2 \varphi_3^{/}}}{a \;\; \cos\varphi_3 + \sqrt{r_3^2 - a^2 \;\; \sin^2 \varphi_3}} \qquad (7)$$

where ω_1, ω_2 - stress and angular velocities of the leading pulleys; r_1 - radii of the pulley, etc.; r_2 - radii of the leading pulley; r_3 - tension roller with radii; a - eccentricity; φ_3 -eccentricity and the outer angle of the first pole radii; $\varphi_3^{/}$ - eccentricity and the outer angle of the pole radii.

If we take into account equality (7), expressions (3) and (4) look like this:

$$x = \frac{\omega_1 r_1 t}{r_2 \lambda} \; \frac{a\cos\varphi_3^{/} + \sqrt{r_3^2 - a^2 \sin^2 \varphi_3^{/}}}{a\cos\varphi_3 + \sqrt{r_3^2 - a^2 \sin^2 \varphi_3}} + R_\phi \cos \; \frac{\omega_1 \quad r_1}{r_2} \; \frac{a \;\; \cos\varphi_3^{/} + \sqrt{r_3^2 - a^2 \;\; \sin^2 \varphi_3^{/}}}{a \;\; \cos\varphi_3 + \sqrt{r_3^2 - a^2 \;\; \sin^2 \varphi_3}} \; t \; ; \qquad (8)$$

$$z = R_\phi \sin \; \frac{\omega_1 \quad r_1}{r_2} \; \frac{a \;\; \cos\varphi_3^{/} + \sqrt{r_3^2 - a^2 \;\; \sin^2 \varphi_3^{/}}}{a \;\; \cos\varphi_3 + \sqrt{r_3^2 - a^2 \;\; \sin^2 \varphi_3}} \; t \; . \qquad (9)$$

$$V_a = \sqrt{(\frac{dx}{dt})^2 + (\frac{dz}{dt})^2} \qquad (10)$$

and

$$a_a = \sqrt{(\frac{d^2x}{dt^2})^2 + (\frac{d^2y}{dt^2})^2} \; . \qquad (11)$$

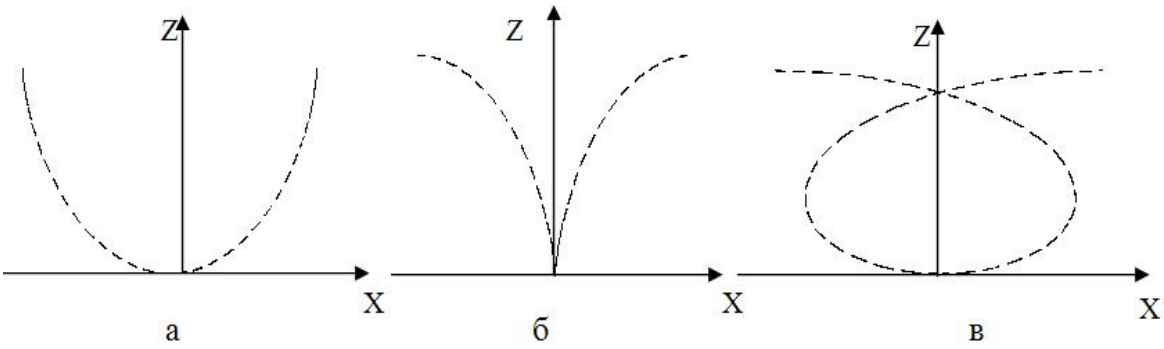

a- λ 1when; b- $\lambda = 1$ when; b- λ 1 when

Fig. 3**.** Gear teeth movement trajectories

The working body, which is visible from this, λ 1 is held by the cover when it is in a superficial view of the ground (Fig.3).

Conclusion

The proposed soil preparation and compaction of aggregates reduces the fuel and fertilizer costs spent on one area by 2…3% in March, reduces soil compaction, ensures the complete sowing process in optimal agro-terms, and allows for the evaporation of natural moisture, allowing for repeated sowing. The necessary conditions for the measures.

REFERENCES

1. Мухамедов Ж., Турдалиев В., Қосимов А. Тупроққа юзаки ишлов берувчи агрегатнинг ротацион ишчи органларини кинематик тахлили // Юқори самарали қишлоқ хўжалик машиналарини яратиш ва улардан фойдаланиш даражасини ошириш. Республика ИАК илмий-мақолалар тўплами. –Гулбахор: -2017. - Б.114-118.

2. Косимов, А. А. (2022). ОБОСНОВАНИЕ КИНЕМАТИЧЕСКИХ ПАРАМЕТРОВ ЗУБЧАТОЙ ПЕРЕДАЧИ СО СЖАТЫМ ШКИВОМ. *Вестник науки и творчества*, (2 (74)), 47-50.

3. Djuraevich, D. A., Maxsudovich, T. V., & Adixamjonovich, Q. A. (2016). The analysis of influence of parameters of chain transfer on change of force of deformation of the elastic element of the compound conducted asterisk. *European science review*, (1-2), 159-160.

4. Turdaliev, V. M., Igrashev, B., Makhkamov, G. U., & Qosimov, A. A. Theoretical Research on the Flight of Onion Seeds under Discharge from the Seeding Unit.

5. Umurzakov, A.K., Turdaliev, V.M. & Khakimov, U.A. Low-Power Hydraulic Motor for Mobile Micropower Stations and Pumps. *Russ. Engin. Res.* **42**, 791–793 (2022). https://doi.org/10.3103/S1068798X22080251

6. Mukhamedov, Z., Turdaliev, V.M. & Kosimov, A.A. Kinematic Nonuniformity of the Rotation of a Toothed Belt Transmission with a Composite Pulley. *Russ. Engin. Res.* **40**, 705–709 (2020). https://doi.org/10.3103/S1068798X20090130

7. Turdaliyev, V.M., Kosimov, A.A. & Sheraliev, I.I. Determining the Tractional Resistance of a Seed Drill by Similarity Theory. *Russ. Engin. Res.* **44**, 1537–1541 (2024). https://doi.org/10.3103/S1068798X24702939